Comparison of AC and DC Microgrid Considering Solar-Wind Hybrid Renewable Energy System

ISSN (e) 2520--7393
ISSN (p) 5021-5027
Received on 13th Mar, 2018
Revised on 28th Mar, 2018
www.estirj.com

Faiza Anam[1], Anwar Ali Sahito[2], Afshan Shah[3]

[1,2,3]*Department of Electrical Engineering Mehran University of Engineering and Technology, Jamshoro*

Abstract: Microgrids with renewable energy resources are increasing rapidly around the world. The best solution for existing problems in electrical power generation is offered by hybrid AC and DC microgrid, especially for the standalone small network. It combines two or more power sources to work coincidentally or when just one is available according to specified scenario. In this paper AC and DC microgrid with Solar-Wind hybrid generation are compared in terms of bus voltages and efficiency. Utility supply or quick start diesel generator is considered as an isolated backup. Simulation models for both AC and DC microgrid are developed in Electrical Transient and Analysis Program software (ETAP). DC microgrids, in general, offer advantages over AC counterparts but it depends upon the configuration of the microgrid and type of load connected.

Keywords: *Microgrid, AC Microgrid, DC Microgrid, Hybrid system, PV Solar Unit, Wind generation.*

1. Introduction

Existing world scenario of increasing demand on electricity has created a challenging situation for power generation. The conventional power generation will not be able to sustain this increased demand, with increased synchronization on carbon emission. With increased demand of electricity, stress on large interconnected grids is increased which could result in blackouts and cascading outages. Also, there are energy crises caused by overconsumption, over population, wastage of energy, poor distribution system, poor infrastructure, old systems and electricity theft. Further, in remote areas installing large power grids is not economically justified due to low power demands. In such a scenario, microgrid holds capability to overcome the energy crisis and increased reliability, help consumers save money, encourage economic growth, energy efficiency, generate power with zero emissions and improved power quality.

Microgrid is very beneficial as the demand for electrical power is increasing day by day. Due to over loading, burden on transmission and distribution systems increases emphasising a subsystem up gradation requiring huge capital cost. By setting up microgrid this issue can be easily resolved. Microgrid with the combination of renewable energy resources are very useful in reducing cost per unit of energy and to enhance local economy. A microgrid works in both grid connected and isolated modes. Isolated mode is beneficial especially for remote areas. One of the critical preferred stand point of microgrid is the capacity to give a chance to customers to make an intellectual decision for utilizing electrical power. If there is a need, microgrid can obtain energy from grid, but in case of increased price, may also be disconnected from grid and work in an isolated mode. Microgrids provide energy source optimization as well as power consumption. Well-designed microgrid can with stand with fault in the system not only by disconnecting entire system or its selected region, but also by precisely turning off separate feeders. Figure.1 shows a typical arrangement of microgrid control system.

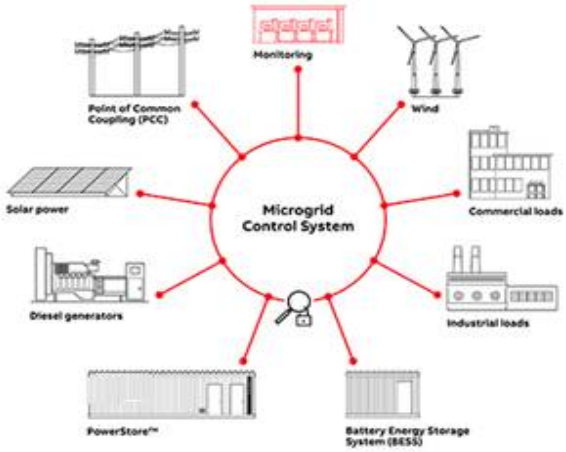

Figure.1.Mircrogrid Control System

Microgrid is capable of bearing both (AC) alternating current and (DC) direct current. Each and every alternative has distinct features, merits and demerits that need to be examined. The merits and demerits of each type of microgrid and feasible configurations require to implement microgrid as provided in [1]. DC and AC models are compared in terms of efficiency, maintainability and reliability in [2], and it is concluded that as compared to AC power system, the obtained reliability in DC system is twice manifold. In [3] applications of microgrid suggesting that distributed generation is used effectively with micro grids. Efficiency and reliability of system are increased as microgrids focus on smaller area of operation. By considering two different scenarios, efficiency of energy supply of low voltage DC distribution scheme is described in [4]. Firstly by supplying AC power to DC loads from main grid and secondly, by supplying power to DC loads from RES such as solar and wind. It has been noticed that

Corresponding author Email address: *faizaiqbal11el05@gmail.com*

DC distribution in microgrid is more efficient. Hence, it is significant to rely on renewable energy sources than to supply from main grid. Microgrid with respect to grid, acts as a single controllable entity. A microgrid is capable to operate in both grid connected and isolated mode, as it can connect and disconnect from grid. Standalone microgrid is a small power grid without any connection with utility AC grid. In [5] author proposed centralized operation strategies by using dc microgrid in order to reduce losses and unbalanced compensation. Efficiency of AC and DC grid connected microgrids is compared in [6] and suggested that DC will have better efficiency with solar generation and DC loads. Household load profile is considered for both AC and Dc microgrids in [7] and efficiency of AC was considered superior to that of DC because of converter requirements for existing AC loads. In [8] new operating technique with coordinated droop control for standalone DC microgrid is proposed. PSCAD/ EMTDC software used for simulation and suggested that standalone DC microgrid is efficient and cost effective solution for energy demands of industrial plants and residential facilities. In [9] single master operation and multi master operation control strategies are compared for standalone microgrids. In [10] model is proposed to determine optimal type and size of microgrid including distributed energy resources model. Twin bus technique is proposed in [11] for system design to deliver electrical energy and realised that microgrids are shortest way to realize smart grid network and hybrid AC/DC system is efficient and reliable. Hybrid system with separation of AC and DC sources is proposed in [11]. Different modes of operation are provided to analyse system. Analysis shows ease of operation with hybrid generation but overall cost is increased with such a system in ref [12], in which renewable energy sources i.e solar and wind are compared. These sources are considered individually in order to evaluate potential of each source to power microgrid efficiently and make it self sufficient. In [13], the impacts of distributed generation integration to power system are discussed and suggested that the negative effects on stability can be minimized by using concept of microgrids. Due to presence of both AC and DC loads, they suggested a hybrid microgrid structure. Microgrids can reduce transmission and distribution losses as loads are supplied by local distributed generations. In [14] microgrid which is PV and wind energy system based is proposed and used technique of supervisory control coordination control for smooth power transfer, grid connected hybrid AC/DC microgrid supervisory control in order to control power transfer from DC to AC bus and from AC to DC bus proposed. In [15] hybrid AC/DC microgrid suggested reduced conversion stages and simplifies operation.In [16] standalone PV-wind energy hybrid generation system under different conditions using MATLAB software is proposed. Wind subsystem equipped with induction generator. Variable dc output voltage of PV system controlled by using buck-boost converter for MPPT. Under different loading conditions, system performs well. However, different busses according to the type of load are not used, only common bus is used in the proposed system.

In thisresearch, work on different operating techniques was analyzed under various power levels generated by renewable sources of AC and DC microgrid. In section 2, an introduction of AC and DC microgrids is given. Section 3 contains description of the systems under study. Results and discussions for simulation of AC and DC microgrids are given in section 4 finally paper is concluded in section 5.

2. Microgrids

Microgrid is a small scale, local distribution system consisting generation and load. Microgrids work locally and in case of fault, it works in an isolated mode called standalone mode. Standalone microgrid is nothing but a small scale power grid without any utility AC grid connection and composed of renewable power sources, generator, battery energy storage and load.Figure.2 shows configuration of typical microgrid.

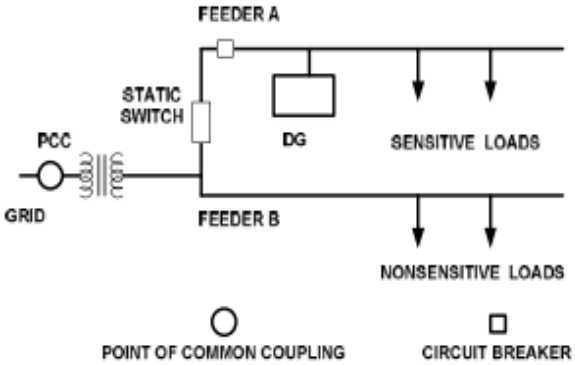

Figure.2. Microgrid Configuration

There are two operating modes of microgrid:

A. Grid Connected Mode

The normal operating mode of microgrid is grid connected mode. In this operating mode all the feeders are being supplied by utility or main grid. Microgrid operates without any power quality disturbance on main grid.

B. Isolated Mode

In isolated mode of operation, microgrid disconnect from main grid whenever fault or any other power disturbance occurs.

Figure.3 shows classification of microgrids in three types; AC, DC and hybrid. It supports both alternating current (AC) and direct current (DC). AC microgrids consists of AC and DC loads, distributed generation and batteries. In alternating current microgrid, all distributed energy resources and loads are connected to a common AC bus.AC microgrid works on two modes of operation. When supplied energy is sufficient for all load demands, microgrid send out energy to utility grid. Otherwise, microgrid absorbs energy from the grid. In the meantime, the batteries are charged with the help of bidirectional AC/DC converter. But when fault occurs at utility grid and the load demands are not satisfied then microgrid is disconnected from utility grid and works in an isolated mode. The merits of AC microgrids involve that it does not disturb the original structure of AC power and voltage transformation is easier. AC microgrids are feasible with both renewable and non-renewable energy. The DC microgrid principle of operation is similar with AC

microgrid implemented with DC backbone network. Having low cost and less system losses due to direct connection through one stage power conversion. Power is supplied directly to DC loads.

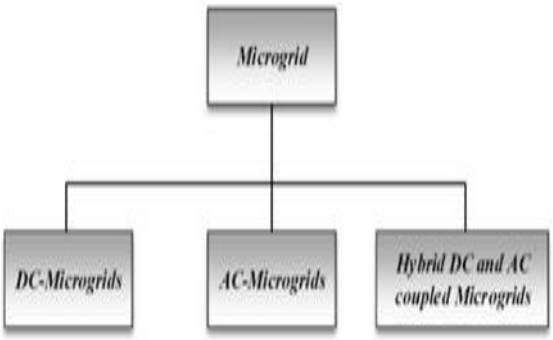

Figure.3 Classification of microgrid

a. AC Microgrid

For several reasons, AC microgrids has won over DC system. AC microgrids provides feasibility to both renewable and non-renewable energy sources. Also, the AC apparatus cost is lesser as compared to the DC apparatus. As worldwide, AC distribution network is predominantly recommended, integration of AC microgrid in distribution network is very useful for conventional power system. AC microgrid can be reliable and feasible for cities as well as in rural areas and if any disturbances or fault occur, reliable power can be generated. Thus, in isolated mode it can also work efficiently. Figure.4 shows typical structure of AC microgrid involving solar and wind generation.

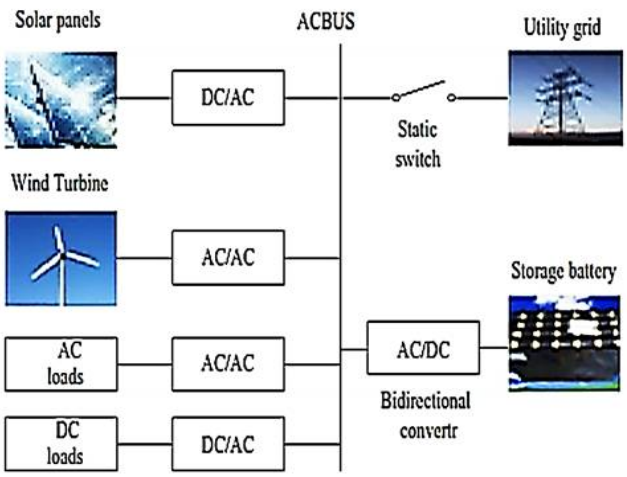

Figure.4. AC bus mircrogrid

b. DC Microgrid

DC microgrid in coming years has an increasing popularity and gives fascinating options over AC microgrid. It can also be operated in grid-connected and isolated mode similar to its AC counterpart. In DC microgrid, distribution generation system mostly composed of PV units, Wind turbines, fuel cells and other renewable energy source used to meet energy demands. From its storage devices, it utilizes the DC output voltage and voltage regulation is better. In DC microgrid, additional synchronization system is not required. Hence DC microgrid with renewable energy resources has been receiving spot lights. Figure.5 shows a typical arrangement of DC microgrid using solar, wind and microgas turbines.

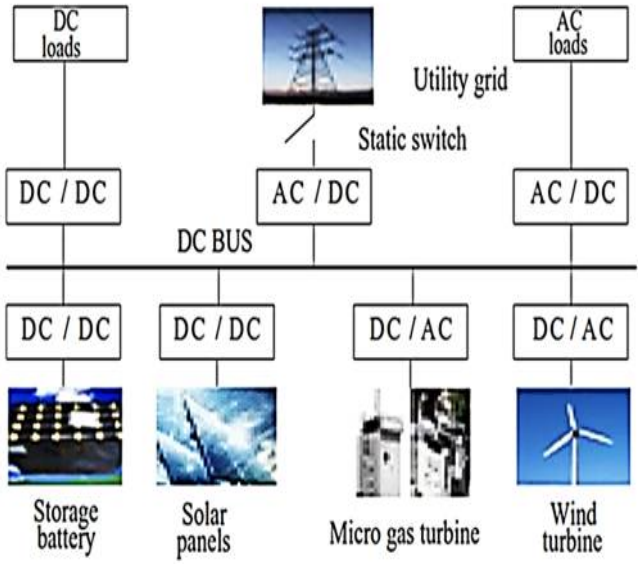

Figure.5. DC bus microgrid

c. Hybrid AC and DC Microgrid

Hybrid microgrid is actually a combination of both AC and DC microgrid, bidirectional converters and control equipments. Hybrid AC/DC microgrids offer best solution for grid integration of different distributed energy resources. In hybrid AC/DC microgrid conversion losses are minimum.

Figure.6 shows typical block diagram of hybrid AC/DC microgrid, involving solar, wind, fuel cell as a source of energy and battery for power storage.

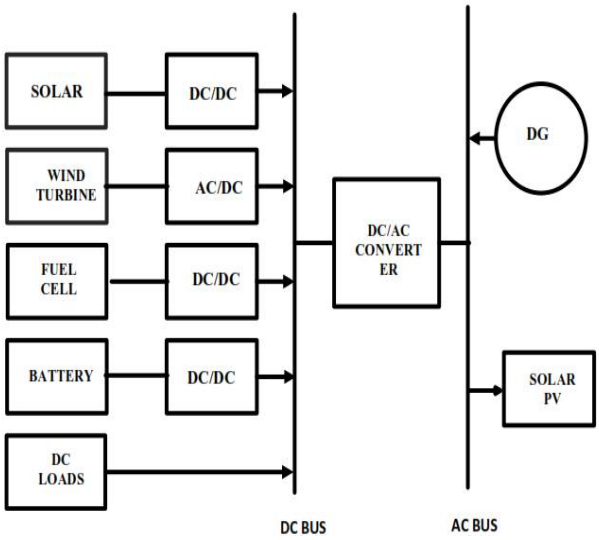

Figure.6. Hybrid AC/DC microgrid

Figure.7 shows a two bus hybrid system for utilizing AC and DC loads with corresponding distribution systems.

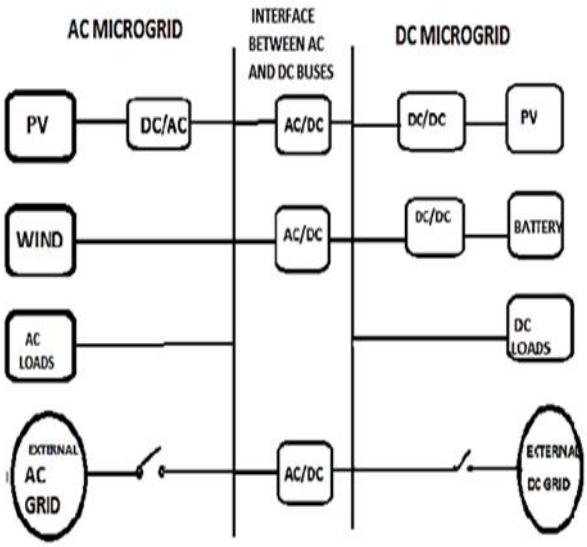

Figure.7. Block diagram of 2 bus power supply system

3. System Description

Figure. 8 and 9 show Block Diagrams of AC and DC microgrid systems used in this research work.

These block diagrams shows the major components of AC and DC system. In both system distributed energy resources i.e, wind and solar are connected to common AC bus. AC bus supplied from both wind unit of 5kW rating and solar unit of 5.3 kW. Wind unit is directly connected with AC bus and solar unit is connected with AC bus through inverter. In an AC system, ac line is used and system is loaded with static load of 8kW, connected with AC load bus. In DC system, AC bus and DC bus are used as two system buses. Both buses connected through AC/DC converter or rectifier. DC line is connected to a DC load bus and system is loaded with 8kw dc static load.

Table.1 shows ratings of the components used in both models used in this research work.

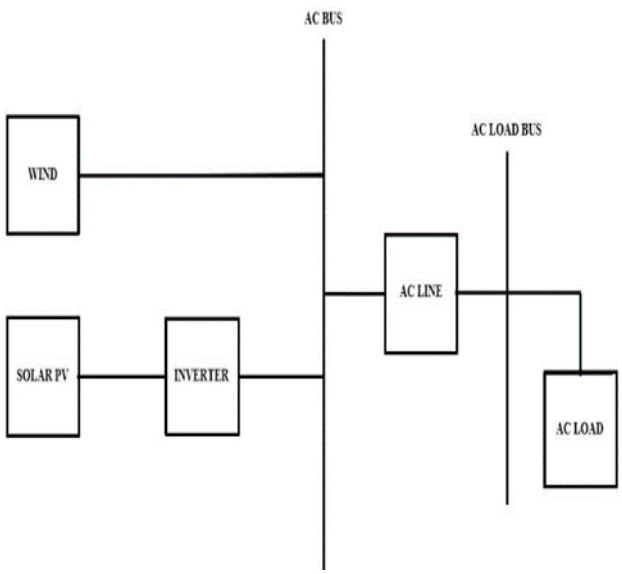

Figure.8. Block Diagram of AC System

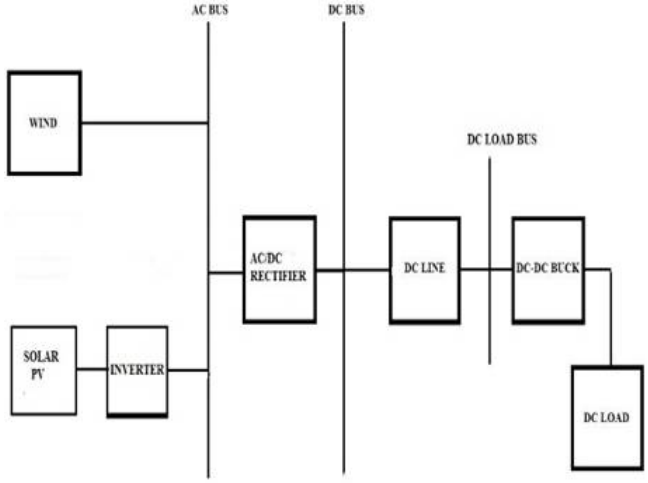

Figure.9. Block Diagram of DC System

Table.1. Parameters and their ratings

Parameters Name	Power	Voltage	Current	P.F (%)
Grid U1	15mVAsc	35kV	200A	66.2%
T/F (T1)	400 KVA			
Bus 2 (Main AC bus)	0.4kV / 399.1V		27	95%
Wind	6 KVA (5 kW)	0.4KV	8.5A	
Solar	4.5KVA (5.3 kW)	159.6V (0.159KV)	6.8A	85%
AC Load	8 kW	(230.4V) 0.230KV	11.6A	100%
DC Bus 1 (Main DC bus)	7.49 kW	400A		
DC Load	8 kW		20A	

4. Result and Discussions

Power flow analysis of AC microgrid is performed such that the load on AC bus is provided by sources Wind turbine generator, PV and DC bus. PV and Wind turbine generator provided 5.3 kW and 5 kW power respectively. 8 kW power is provided to AC load. Same load of 8 kW is used in DC system and is provided by Dc system.

Table.2. Load generation data

AC Side	DC Side Load	Utility Grid	AC to DC Power exchange rate
PV = 5.3 kW	8 kW	0	10 kW
Wind = 5 kW			

In Table.3 load flow, branch losses and voltage level on both buses as a function of equal load on both buses are collected, and concluded that AC system losses are higher than DC system losses. Efficiency of solar is greater i.e 96% than wind i.e 90% .

Table.3. (a). Energy Sources & Efficiency

Energy Source	Energy Rating	Current	Load in %	AC Bus Voltage %	DC Bus Voltage %
Solar	5.3 kW	Input current (78.2A) 33.46A /6.5A	80%	99.78%	100%
Wind	5 kW	8.5A (40.5A)			

Table.3. (b). Energy Sources & Efficiency

Load in DC Bus	Load in AC Bus	Efficiency Rate Solar and Wind	AC System Losses kW	DC System Losses kW
8 kW	8 kW	Solar 96%	0.22	0.215
		Wind 92%		

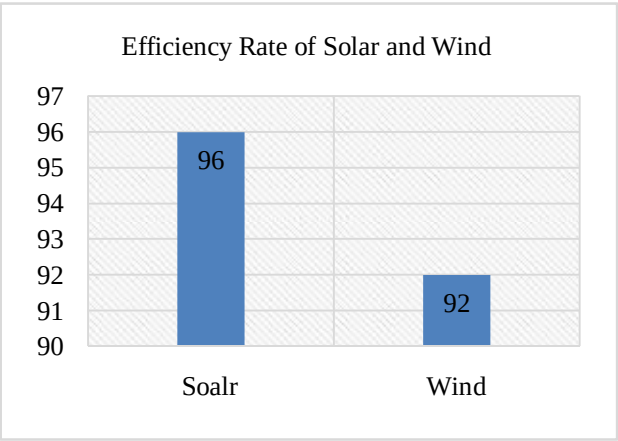

Figure.10. Efficiency rate of Solar and Wind

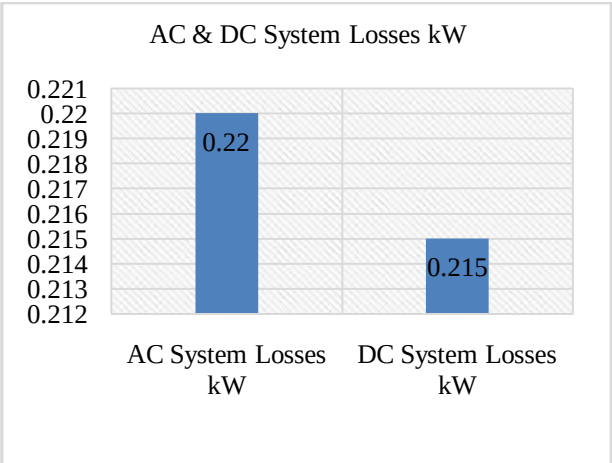

Figure.11. AC & DC System Losses

In Table.4. In terms of efficiency bus voltage comparison is shown and concluded that efficiency of DC is greater than AC system.

Table.4. Bus Voltage Comparison

Bus Voltage Comparison			
Bus	**AC Voltage**	**DC Voltage**	**Efficiency**
DC	400V	400V	100%
AC	400V	400V	99.78%

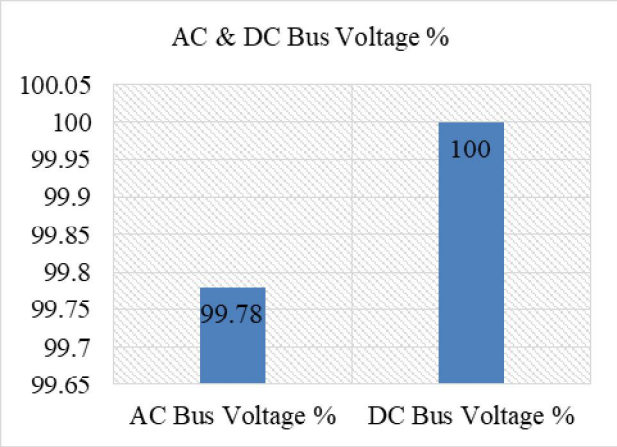

Figure.12. AC and DC Bus Voltage Comparison in %

5. Conclusion

Microgrids with renewable energy resources are increasing rapidly around the world. In Pakistan, standalone microgrid is a suitable option for offices, universities and flats. Utility supply or quick start Diesel generator can be used as isolated backup. In this research work, AC and DC microgrids with Solar -Wind hybrid generation are compared in terms of bus voltages and efficiency. Issues in hybrid generation are identified. AC microgrid has synchronization issue. Hence PV and Wind generations are connected at DC bus for both AC and DC microgrid. Results shows that AC microgrid has lower bus voltage at load as compared to DC microgrid. AC microgrid has losses more than DC because DC microgrid has higher efficiency as compared to AC microgrid.

References

[1] Planas, E., Andreu, J., Gárate, J. I., de Alegría, I. M., and Ibarra, E. "AC and DC technology in microgrids: A review." Renewable and Sustainable Energy Reviews 43, pp.726-749, 2015.

[2] Hong, Tianqi, and Francisco De Leon. "Centralized Unbalanced Dispatch of Smart Distribution dc Microgrid Systems." IEEE Transactions on Smart Grid, 2016.

[3] Lasseter, R.H. and P. Paigi, "Microgrid a conceptual solution", Proceedings of *IEEE 35th Annual* Power Electronics Specialists Conference, (*PESC 04)*, Vol.6, pp. 4285-4290, 2004.

[4] Sirsi, Rohan, Shashikant Prasad, Abhishek Sonawane, and Atul Lokhande. "Efficiency comparison of AC distribution system and DC distribution system in microgrid." In Energy Efficient Technologies for Sustainability (ICEETS), 2016 International Conference on, pp. 325-329. IEEE, 2016.

[5] Elsayed, Ahmed T., Ahmed A. Mohamed, and Osama A. Mohammed. "DC microgrids and distribution systems: An overview." Electric Power Systems Research 119, pp. 407-417, 2015.

[6] Atia, H. R., Shakya, A., Tandukar, P., Tamrakar, U., Hansen, T. M., and Tonkoski, R, "Efficiency analysis of AC coupled and DC coupled microgrids considering load profile variations.", In Electro Information Technology (EIT), 2016 IEEE International Conference on, pp. 0695-0699, 2016.

[7] Lopes, J. P., Moreira, C. L., & Madureira, A. G. "Defining control strategies for microgrids islanded operation". IEEE Transactions on power systems, Vol. 21(2), pp. 916-924, 2006.

[8]Kim, Hyun-Jun, Tae-Hee Han, and Byung-Moon Han, "Operation analysis of stand-alone DC micro-grid with coordinated droop control." In ECCE Asia Downunder (ECCE Asia), 2013 IEEE, pp. 692-698. IEEE, 2013.

[9] Lotfi, H; and Khodaei. A. "AC versus DC Microgrid Planning", IEEE Transactions on Smart Grid, Vol.1, pp. 1-9, 2015.

[10] Rahmanov, N. R., Tabatabaei, N.M., Dursun, K., and Kerimov, O. Z., "Combined AC-DC microgrids.", Case study-network development and simulation. In Proceedings Plenary Lecture No. 00PLL03 8 International Conference ICTPE, pp. 8-12, 2012.

[11] Ahmedova, N. R. O. K. S, "simulation of steady state operation for AC/DC microgrid", International Journal on"Technical and Physical Problems of Engineering" (IJTPE), Issue 21 Vol. 6, No 4 pp 22-29, 2014.

[12] Qamar, Sayyad Basim, and Isam Janajreh. "Renewable energy sources for isolated self-sufficient microgrids: comparison of solar and wind energy for UAE." Energy Procedia 103 (2016): 413-418.

[13] Jiang, Zhenhua, and Xunwei Yu. "Hybrid DC-and AC-linked microgrids: towards integration of distributed energy resources." In Energy 2030 Conference, 2008. ENERGY 2008. IEEE, pp. 1-8. IEEE, 2008.

[14] Gabbar, Hossam A., Mohamed El-Hendawi, G. El-Saady, and El-Nobi A. Ibrahim. "Supervisory controller for power management of AC/DC microgrid." In Smart Energy Grid Engineering (SEGE), 2016 IEEE, pp. 147-152. IEEE, 2016.

[15] Liu, Xiong, Peng Wang, and Poh Chiang Loh. "A hybrid AC/DC microgrid and its coordination control." IEEE Transactions on Smart Grid 2, no. 2, 278-286, 2011.

[16] El-Hady, Abeer AM, Shawky H. Arafa, Maged NF Nashed, and Salah G. Ramadan. "Modeling and Simulation for Hybrid of PV-Wind system." International Journal of Engineering Research (IJER) http://www. ijer. in/ijer/(ISSN: 2319-6890 online, 2347-5013 print) Vol 4, 178-183, 2015.

About Authors

Faiza Anam (M.E) Student. Institute of Information & Communication Technologies (IICT) MUET, Jamshoro

Dr. Anwar Ali Sahito (Associate Professor) Department of Electrical Engineering, MUET, Jamshoro

Afshan Shah (Lecturer) Department of Electrical Engineering, IBA Sukkur